HG 2120 E

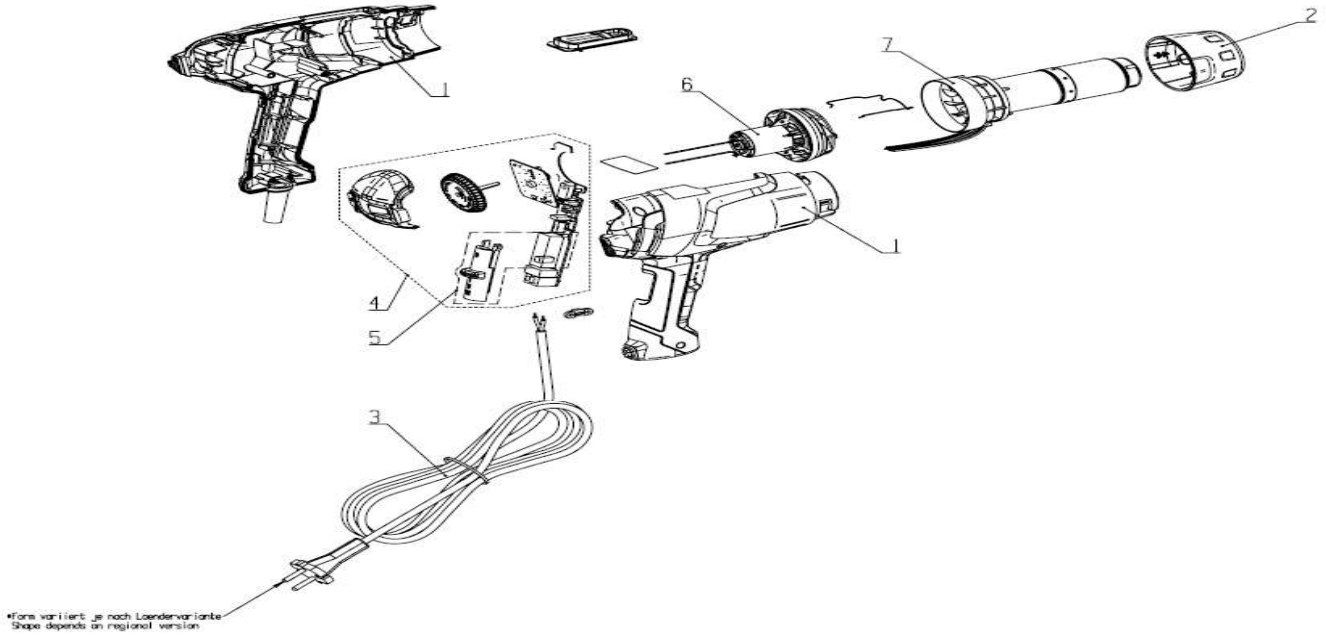

HG 2120 E

Pos.	Baugruppe / spare part		EU-VS	VPE	JP-VS	VPE	CH-VS	VPE	Exportpreis €/Stk. Export price €/pc.	Europapreis €/Stk. European price €/pc.
1	Gehäusesatz	Art. Nr.	110036965	1	110036965	1	110036965	1		
	Housing set	EAN	4007841009410		4007841009410		4007841009410			
2	Schutzrohr	Art. Nr.	110036961	1	110036961	1	110036961	1		
	Protection tube	EAN	4007841009373		4007841009373		4007841009373			
3	Netzkabel	Art. Nr.	110023129	1	102715200	5	-			
	Power cord	EAN	4007841004163		4007841005443		-			
	Netzkabel 7,5m	Art. Nr.	110040700	1	-		-			
	Power cord 7,5m	EAN	4007841012731		-		-			
4	Elektronikeinheit	Art. Nr.	110036963	1	110051148	5	110036963	1		
	Electronic unit	EAN	4007841009397		4007841034795		4007841009397			
5	Schaltereinheit	Art. Nr.	110036962	1	-	5	110036962	1		
	Switch unit	EAN	4007841009380		-		4007841009380			
6	Motoreinheit	Art. Nr.	110036971	1	110036971	5	110036971	1		
	Motor unit	EAN	4007841009472		4007841009472		4007841009472			
7	Heizelement	Art. Nr.	110036966	1	110051149	5	110036966	1		
	Heating element	EAN	4007841009427		4007841034801		4007841009427			